Hex Reducing Nipple

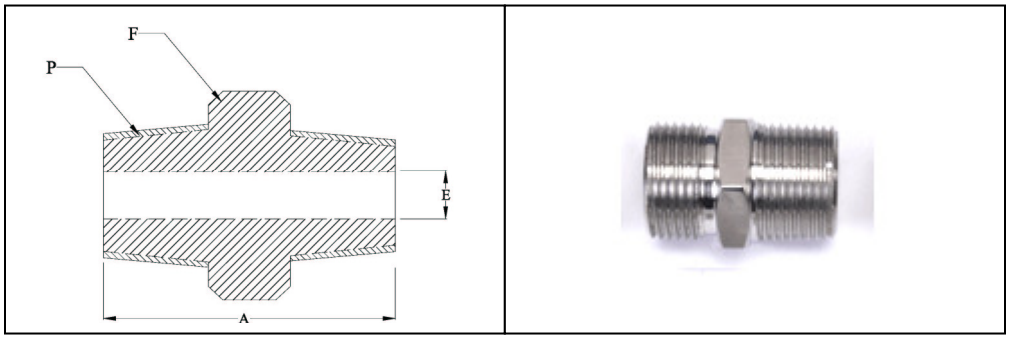

Pipe Size		Dimensions		
P-PT, NPT	P_1-PT, NPT	A	E	F
1/4	1/8	32	5	9/16
3/8	1/4	38	7	11/16
1/2	1/4	42	7	7/8
1/2	3/8	42	9.5	7/8
3/4	3/8	43	9.5	1-1/16
3/4	1/2	48	12	1-1/16
1	1/2	58	12	1-3/8
1	3/4	58	15	1-3/8